Hydraulic Training Systems

Teaching and learning hydraulics in real-time

MF102-H Hydraulic Training System -

"The strength of a person's knowledge of hydraulics is directly proportional to the foundation upon which it is built"
– Rory S. McLaren

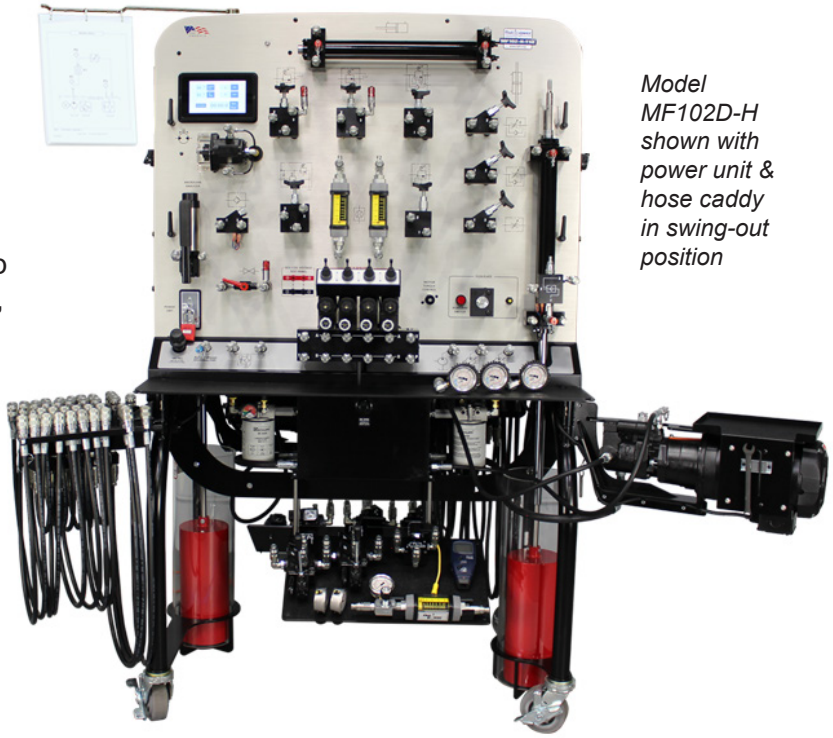

Model MF102D-H shown with power unit & hose caddy in swing-out position

The MF102-H Training System -
A *"foundation building"* masterpiece-
The MF102-H is a brilliant "foundation building" training system that is masterfully crafted to help students connect the dots. Pascal's Law, inertia, power, resistance, pressure differential, series, parallel – theory, it's all so confusing if the students can't apply it, yet it's the very foundation upon which their knowledge of hydraulics is built.

Combines theory with practice brilliantly -
The MF102 combines theory with practice brilliantly. Every training system activity has a defined learning outcome. However, each consecutive activity is so brilliantly engineered that 10% of the activity relates to the new topic and 90% is critical reinforcement.

It's limits? - Your imagination -
Teach any pump/system – fixed displacement, pressure compensated, load-sensing. Teach any type of component - even the one's it doesn't have – with the optional Flex-Plate modules.

Simply fasten your unique component to a universal mounting plate (available from FPTI™) and when needed clip it on the FlexPlate - no hardware needed.
There is also a convenient 24VDC power supply and illuminated on/off switch for electric valves. Many of the add-on valves are available - ready-to-use - from FPTI™. See the entire assortment at:

www.fpti.org

If you don't see what you are looking for on our website let us know and we will build it for you - ready to use.

Flex-Plate modules expand the capability of your MF102 series training system

fluipower TRAINING INSTITUTE™
www.fpti.org

2170 South 3140 West, Salt Lake City, UT 84119 • Tel. 801.908.5456 • info@fpti.org

888-222-3421

Hydraulic Training Systems

Teaching and learning hydraulics in real-time

MF102-H Hydraulic Training System -

Teach any type of system or component -

- Fixed displacement pump - standard
- Pressure-compensated pump – standard
- Load-sensing pump – optional

Students advance from fixed displacement pump circuits, to pressure-compensated pump circuits, and, if the curriculum permits, load-sensing circuits, on one training system.

Why this feature is important:
The most logical learning path for a student is to begin with fixed displacement pumps, and then advance to pressure-compensated pumps and then to load-sensing pumps.

The MF102-H training system provides instructors the opportunity to teach all of these popular systems.

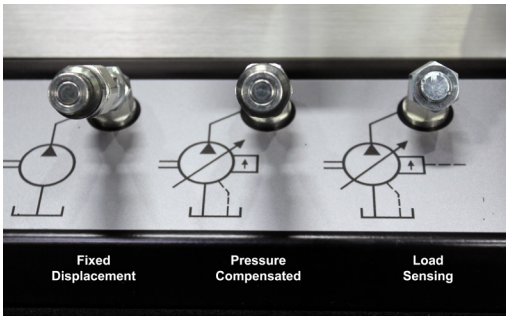

Unprecedented student retention -
MF102-H training system achieves the highest student retention of any hydraulic training system currently available – bar none!

Hardware in perfect harmony with the software -
The MF102-H training system works in perfect harmony with the equally as well engineered curriculum, visual aids, textbooks, PowerPoint™ presentations, animations, and support. Why does our course teach pressure control valves before pumps? Because a pressure compensator is a pressure relief valve. Why does it teach flow control valves before load sensing systems? Because the flow compensator in a load-sensing pump is a pressure-compensated flow control valve.

Fine tuned for over three decades in a teaching legend's classroom -
FPTI™'s founder and chief engineer is recognized as one of the most brilliant hydraulic teachers in the industry. You will find him most of the time doing what he loves best – teaching. In fact, if you attend our Train-the-Trainer workshop you will be learning how to use this magnificent training system by the legend himself – Rory S. McLaren.

We outperform our competitors on every count because no one cares as much as we do about what students learn as we do – absolutely no one.

Six directional control valves -

- Three (3) industrial-type (parallel)
- One (1) industrial-type (series)
- One (1) mobile-type (cylinder spool center)
- One (1) mobile-type (motor spool center)

Why these features are important:
Students graduate from learning simple, single valve/single actuator, circuits to constructing the types of circuits they will see in any plant or on any construction machine.

There is almost no limit to the number and variety of circuits students can construct on the MF102-H training system.

fluipower TRAINING INSTITUTE™
www.fpti.org

2170 South 3140 West, Salt Lake City, UT 84119 • Tel. 801.908.5456 • info@fpti.org

888-222-3421

Hydraulic Training Systems

Teaching and learning hydraulics in real-time

MF102-H Hydraulic Training System -

Port identification consistent with industry standards -
It is absolutely critical that students learn how important it is to make proper transmission line connections when installing hydraulic components or reconnecting transmission lines. An error can result in severe injury or death.

Component manufacturers typically use letters and/or numbers for port identification. All components on FPTI™ training systems are marked with the appropriate identification. Also, all hydraulic schematics in the student activities manuals show the appropriate markings.

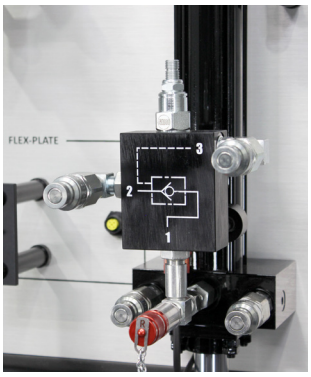

Not just a training simulator, an entire turnkey training system -
Not only do you get the most advanced hydraulic training simulator in the world, you also get everything you need to conduct a world-class course:

- Textbooks - written and produced by one of the most successful and renowned hydraulics instructors in the industry - FPTI™'s founder Rory S. McLaren.

Every topic is to the point and safety-based.

- Student workbooks - well written and superbly illustrated with need-to-know information.
- PowerPoint™-based CD's covering at least 40 hours of instruction in hydraulics and another 40 hours of advanced diagnostics.
- Instructor answer books.
- Student workbook and Instructor answerbook available for purchase.

Everything you need to conduct a "world-class" course is included

Efficient and convenient use of space and energy -
Efficient space utilization - laboratory space is limited and expensive. In many cases all an instructor has to train in is a classroom. The MF102 series hydraulic training simulators are designed with this in mind. The footprint is a mere 30" (76 cm) deep by 48" (122 cm) wide by 77" (196 cm) high. It is designed to fit through a standard doorway.

Energy savings and convenience -
The MF102 series hydraulic training simulator with dual stations has dual power-units. Each power-unit must operate from a dedicated single 120VAC, 20-amp circuit. The aesthetic frame design leaves the floor-space below the simulator accessible for cleaning.

A friend of the environment and your insurance company -
All temporary hose connections are made with zero-leak, flat-face type quick-connect/disconnect valves This means no oil leaks thus minimizing the potential for slip-hazards. There is also no need to purchase consum-ables for mopping up oil or to invest in expensive equipment and services to dispense of hazardous waste.

Plug-and-Play modules give the MF102 series unlimited training flexibility -
Want to teach mobile directional control valves; proportional direction/flow control valves; stacked valves; orbitrol steeringsystems; logic valves; etc?

Simply purchase an affordable plug-and-play module, which easily attaches to either side of the MF102 series simulator.

The modules are designed to integrate seamlessly with the components on any model MF102. Most plug-and-play modules are available with diagnostics capability.

fluipower TRAINING INSTITUTE™
www.fpti.org

2170 South 3140 West, Salt Lake City, UT 84119 • Tel. 801.908.5456 • info@fpti.org

888-222-3421

MF102-H Hydraulic Training System -

Specifications (Model MF102-H) -
The model MF102-H training systems are equipped with the following components:

1. ***Pump -*** Axial piston-type, variable volume, pressure-compensated; 1.0 GPM (3.78 Lpm); 1000 PSI (69 bar); adjustable pressure compensator; adjustable flow
2. ***Electric motor -*** Single-phase; 115V; TEFC; 1750 RPM; C-face; thermal overload protection
3. ***Electric motor on/off switch -*** Lockout/tagout mechanism; thermal overload protection with manual reset
4. ***Hydraulic reservoir -*** capacity 4.5 gallon (17 liter)
5. ***Filtration -*** 10 micron, spin on/off element w/by-pass gauge
6. ***Directional control valves -*** seven (7) total;
   - One (1) DO3-type; tandem-center; 3-position; 4-way; spring-centered; solenoid-controlled; 24V coils. Also includes sandwich-mounted, knob-adjustable pump port flow control valve
   - Two (2) DO3-type; closed-center; 3-position; 4-way; spring-centered; solenoid-controlled; 24V coils. Also includes sandwich-mounted, dual, knob-adjustable flow control valves
   - One (1) DO3-type; float-center; 3-position; 4-way; spring-centered; solenoid-controlled; 24V coils. Also includes sandwich-mounted, knob-adjustable pump port flow control valve
   - One (1) Monoblock type valve; cylinder spool; 3-position; 4-way; spring-centered; hand-lever operated w/pressure relief valve
   - One (1) Monoblock type valve; motor spool; 3-position; 4-way; spring-centered; hand-lever operated w/pressure relief valve
   - One (1) 2-position, 3-way, solenoid-operated, cartridge type, directional control valve
7. ***Pilot-operated pressure relief valve w/knob adjustment***
8. ***Direct-operated pressure relief valve w/knob adjustment***
9. ***Sequence valve w/knob adjustment***
10. ***Pressure reducing valve w/knob adjustment***
11. ***Counterbalance valve with internal reverse flow check w/knob adjustment***
12. ***Needle valve w/knob adjustment***
13. ***Flow control valve w/knob adjustment***
14. ***Pressure-compensated flow control valve*** restrictor-type; reverse flow bypass; w/knob adjustment
15. ***Check valve***
16. ***Pilot-operated check valve w/manual override***
17. ***Cylinder -*** single-rod; double-acting; 14” (36cm) stroke
18. ***Cylinder -*** double-rod; double-acting; 14” (36cm) stroke; w/load engage/disengage mechanism
19. ***Motor -*** bi-directional; gear-type; w/infinitely variable torque capability
20. ***Flow meters -*** two (2); 0-2.0 GPM (7.56 Lpm)
21. ***Tachometer -*** hydraulic motor shaft speed (displayed on the panel-mounted touchscreen)
22. ***Ammeter -*** (displayed on the panel-mounted touchscreen)
23. ***Dual scale temperature gauge -*** Oil temperature & ambient temperature (displayed on the panel-mounted touchscreen)
24. ***Stopwatch -*** (displayed on the panel-mounted touchscreen)
25. ***Pressure gauges -*** three (3); 0-1500 PSI (103 bar); PSI and bar scales; 2.5” (6.35cm); glycerine-filled; Bourdon tube type; w/flat-face type quick-connect/disconnect type valves
26. ***Load -*** 100 lb (45 Kg); Engage/disengage with mechanical latch. Entire weight is contained within a transparent safety enclosure.
27. ***Hose storage caddy -*** stow-away/swing-out
28. ***Hoses*** (per side) ***-***
    - Four (4) - 60” (152cm)
    - Eight (8) - 46” (117cm)
    - Six (6) - 26” (66cm)
    SAE 100-R1; w/flat-face type quick-connect/disconnect type valves
29. ***T’s -*** eight (8) (per side) w/flat-face type quick-connect/disconnect type valves
30. ***Pressure/leak test pump w/quick-connect/disconnect valve***

fluipower TRAINING INSTITUTE™
www.fpti.org

Model MF102-H Hydraulic Training System -

Shipping Specifications - *(Subject to change)*
Ship weight (does not include pallet or packaging):
Double unit: 900 lbs (408 kgs)
Single unit: 750 lbs (340 kgs)

Shipping dimensions (all models):
84” (213cm) H x 54” (137cm) W x 42” (106cm) D

Warranty -
FPTI™ warrantees it’s products against defect in materials or workmanship for a period of two (2) years from date of delivery.

Electrical Requirements for Operation -
110 VAC, 20 Amp dedicated circuit per workstation (panel). If an extension cord is used, it must be 12-gauge wire or larger, 3-conductor (neutral, hot, ground), 50-foot (15.24m) length max.

Simulator Dimensions

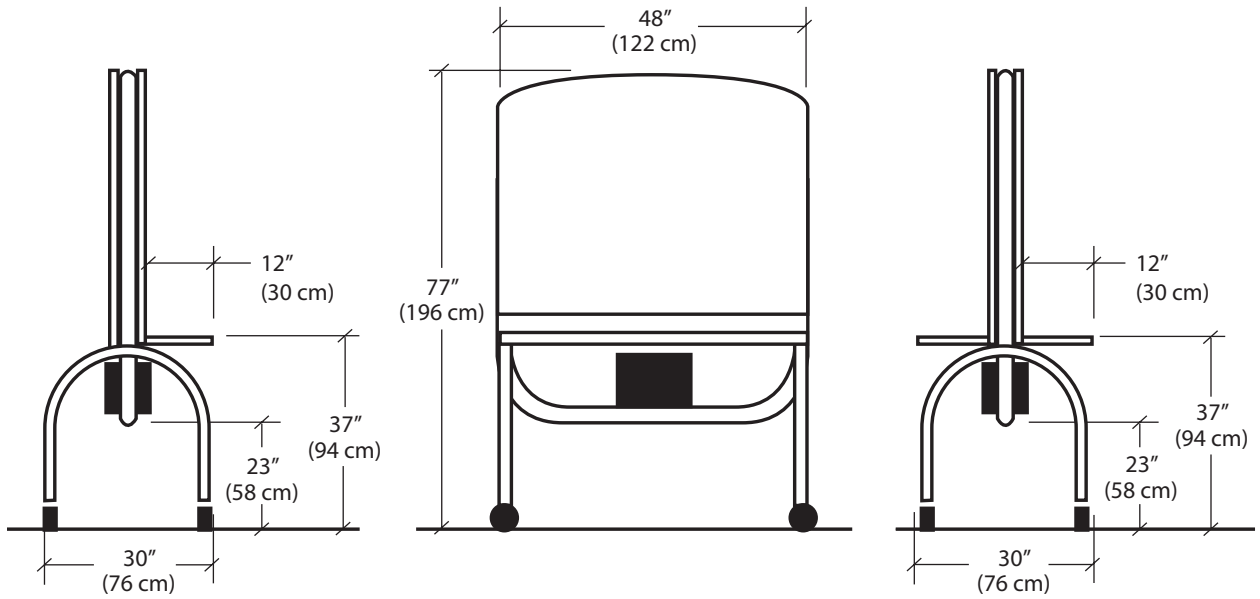

fluidpower TRAINING INSTITUTE™ www.fpti.org

2170 South 3140 West, Salt Lake City, UT 84119 • Tel. 801.908.5456 • info@fpti.org

888-222-3421